MMSFA65R280S6Z

650V 0.28Ω N-channel MOSFET

■ Description

Superior 6th generation SJ MOSFETs (S6-series) are cutting-edge high voltage power MOSFETs, based on Magnachip's extensive design expertise and years of experience. The main strengths of S6-series are low on-resistance, low gate charge and reduced tendency for ringing. As a result, its switching loss is very low, making it optimized for switching applications. Moreover, these user friendly devices offer the advantages of improved ruggedness and remarkable ESD capability by integrated Zener diode, making it an ideal choice for designers.

■ Key parameters

Parameter	Value	Unit
V_{DS} @ $T_{j,max}$	700	V
$R_{DS(on),max}$	0.28	Ω
$V_{TH,typ}$	3.5	V
I_D	12	A
$Q_{g,typ}$	11.9	nC

■ Package & internal circuit

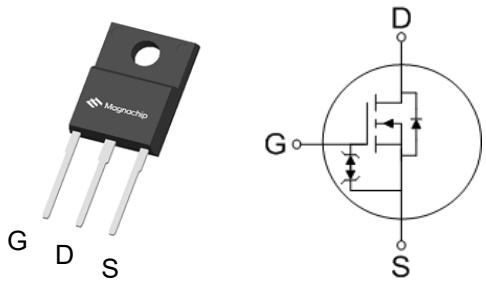

■ Features

- Low power loss by high speed switching and low on-resistance
- 100% avalanche tested
- Green package – Pb free plating, halogen free
- Zener-integrated

■ Applications

- PFC power supply stages
- Switching applications
- Adapter
- DC-DC converters

■ Ordering Information

Order Code	Marking	Temp. Range	Package	Packing	RoHS Status
MMSFA65R280S6ZTH	A65R280S6ZS	-55 ~ 150°C	TO-220SFA	Tube	Compliant

■ Absolute maximum rating (T_c=25°C unless otherwise specified)

Parameter	Symbol	Rating	Unit	Note
Drain-source voltage	V_{DSS}	650	V	
Gate-source voltage	V_{GSS}	±25	V	
Continuous drain current[1)]	I_D	12	A	T_C=25 °C
		7.6	A	T_C=100 °C
Pulsed drain current[2)]	I_{DM}	36	A	
Power dissipation	P_D	24	W	
Single-pulse avalanche energy[3)]	E_{AS}	38	mJ	
MOSFET d*v*/d*t* ruggedness	d*v*/d*t*	50	V/ns	
Continuous diode forward current	I_{SD}	12	A	
Diode d*v*/d*t* ruggedness[4)]	d*v*/d*t*	50	V/ns	
Storage temperature	T_{stg}	-55 ~150	°C	
Maximum operating junction temperature	T_j	150	°C	

1) I_D limited by maximum junction temperature, Duty cycle D=0.5
2) Pulse width t_P limited by $T_{j,max}$
3) I_{AS} = 1.7 A
4) $I_{SD} \leq I_D$, $V_{DS\ peak} \leq$ 400V, d*i*/d*t* ≤ 900A/μs

■ Thermal characteristics

Parameter	Symbol	Value	Unit
Thermal resistance, junction-case max	R_{thJC}	5.23	°C/W
Thermal resistance, junction-ambient max	R_{thJA}	65.3	°C/W

■ Static characteristics (T_c=25°C unless otherwise specified)

Parameter	Symbol	Min.	Typ.	Max.	Unit	Test Condition
Drain–source breakdown voltage	$V_{(BR)DSS}$	650	-	-	V	V_{GS} = 0V, I_D = 1mA
Gate threshold voltage	$V_{GS(th)}$	2.5	3.5	4.5	V	V_{DS} = V_{GS}, I_D = 250μA
Zero gate voltage drain current	I_{DSS}	-	-	1	μA	V_{DS} = 650V, V_{GS} = 0V
Gate leakage current	I_{GSS}	-	-	10	μA	V_{GS} = ±25V, V_{DS} =0V
Drain-source on-state resistance	$R_{DS(ON)}$	-	0.246	0.280	Ω	V_{GS} = 10V, I_D = 3.8A

■ Dynamic characteristics (T_c=25°C unless otherwise specified)

Parameter	Symbol	Min.	Typ.	Max.	Unit	Test Condition
Input capacitance	C_{iss}	-	900	-	pF	V_{DS} = 400V, V_{GS} = 0V, f = 250kHz
Output capacitance	C_{oss}	-	19	-		
Reverse transfer capacitance	C_{rss}	-	3.8	-		
Effective output capacitance energy related[5)]	$C_{o(er)}$	-	29	-		V_{DS} = 0V to 400V, V_{GS} = 0V, f = 250kHz
Effective output capacitance time related[6)]	$C_{o(tr)}$	-	211	-		V_{DS} = 0V to 400V, V_{GS} = 0V, f = 250kHz
Turn-on delay time	$t_{d(on)}$	-	23.7	-	ns	V_{GS} = 10V, R_G = 25Ω, V_{DD} = 325V, I_D = 12A
Rise time	t_r	-	35.1	-		
Turn-off delay time	$t_{d(off)}$	-	69.9	-		
Fall time	t_f	-	12.6	-		
Total gate charge	Q_g	-	22.7	-	nC	V_{GS} = 10V, V_{DD} = 400V, I_D = 3.8A
Gate–source charge	Q_{gs}	-	4.6	-		
Gate–drain charge	Q_{gd}	-	10.1	-		
Gate resistance	R_G	-	9.9	-	Ω	V_{GS} = 0V, f = 1MHz

5) $C_{o(er)}$ is a capacitance that gives the same stored energy as C_{OSS} while V_{DS} is rising from 0 to 400V
6) $C_{o(tr)}$ is a capacitance that gives the same charging time as C_{OSS} while V_{DS} is rising from 0 to 400V

■ Reverse diode characteristics (T_c=25°C unless otherwise specified)

Parameter	Symbol	Min.	Typ.	Max.	Unit	Test Condition
Diode forward voltage	V_{SD}	-	-	1.4	V	I_{SD} = 3.8A, V_{GS} = 0V
Reverse recovery time	t_{rr}	-	214	-	ns	I_{SD} = 3.8A di/dt = 100A/μs V_{DD} = 400V
Reverse recovery charge	Q_{rr}	-	1.8	-	μC	
Reverse recovery current	I_{rrm}	-	16.7	-	A	

■ Characteristic graph

Fig.1 On-region characteristics.

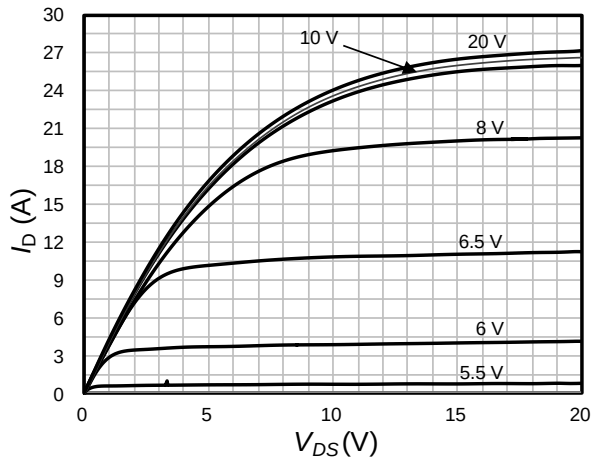

Fig.2 On-resistance variation with drain current

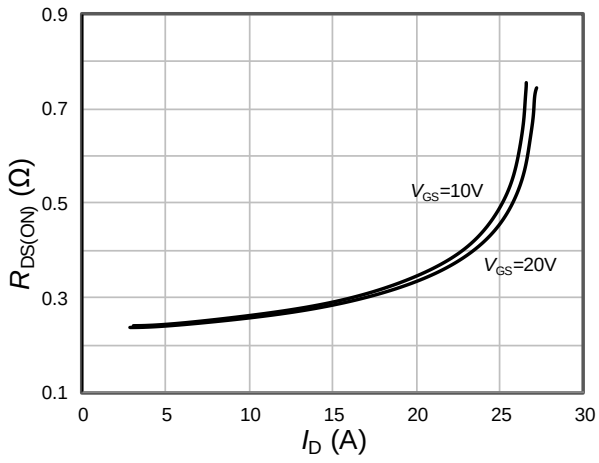

Fig.3 On-resistance variation with junction temperature (normalized)

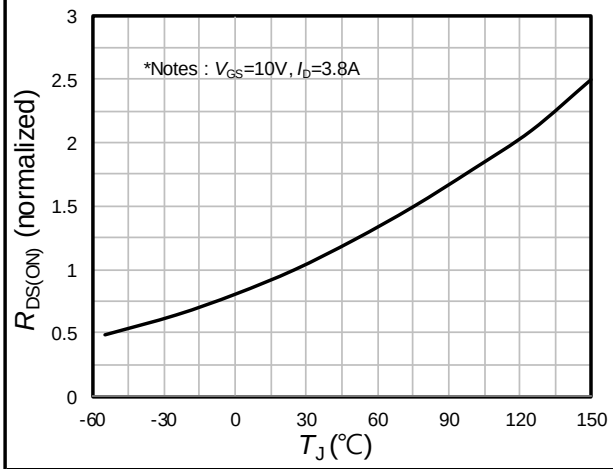

Fig.4 Breakdown voltage variation with temperature (normalized)

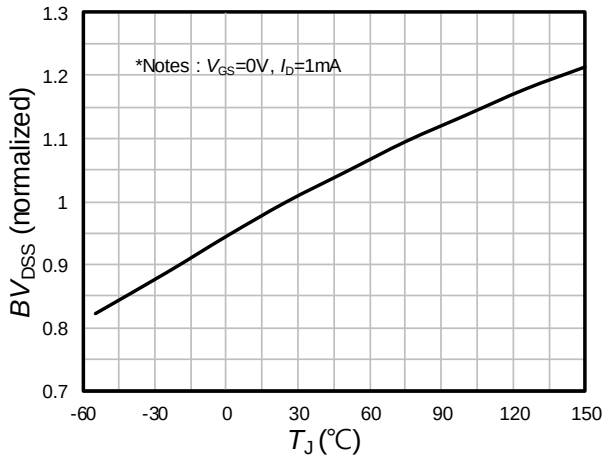

Fig.5 Transfer characteristics

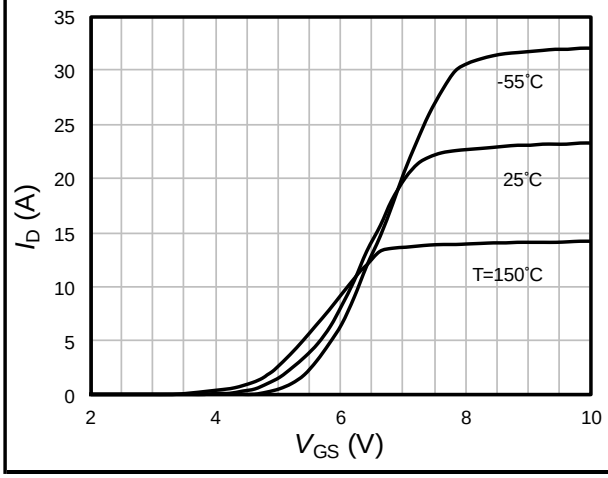

Fig.6 Diode forward characteristics

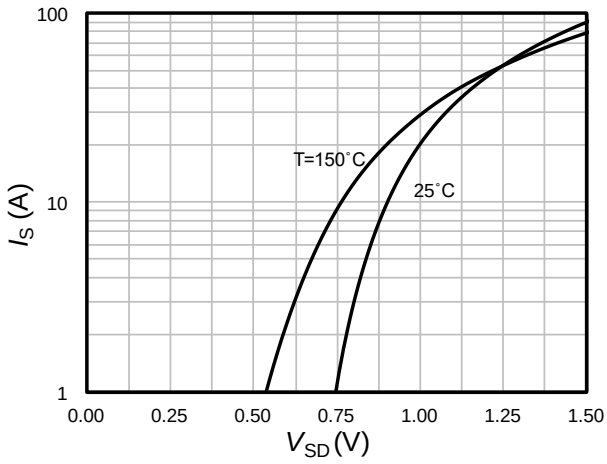

Fig.7 Gate charge characteristics

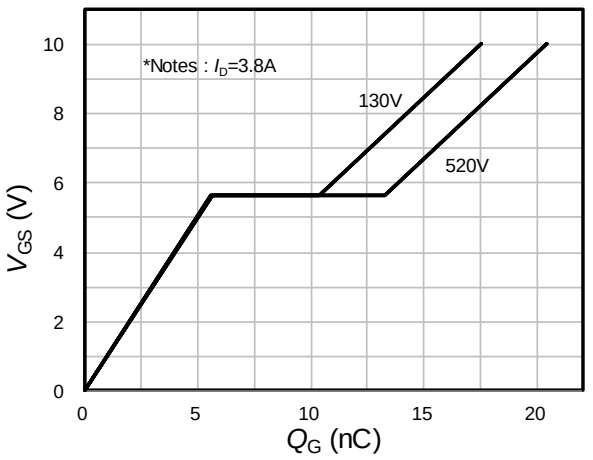

Fig.8 Capacitance characteristics

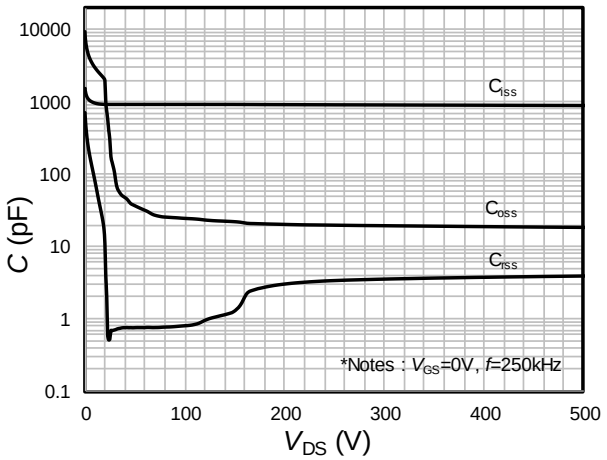

Fig.9 Threshold voltage variation with junction temperature

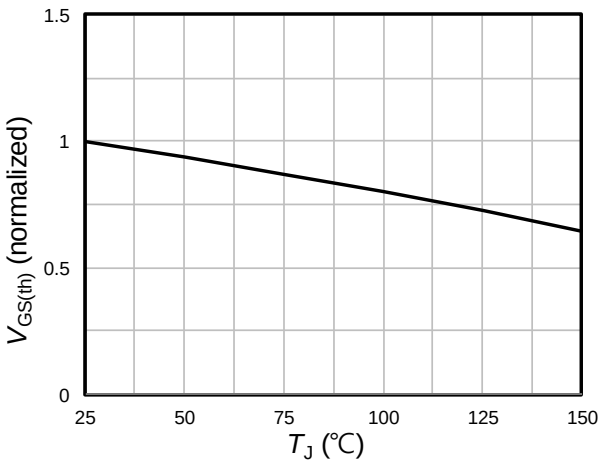

Fig.10 Drain current

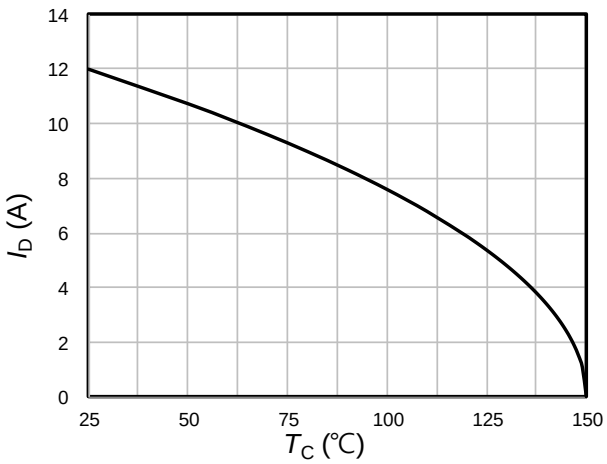

Fig.11 Power dissipation variation with pulse time

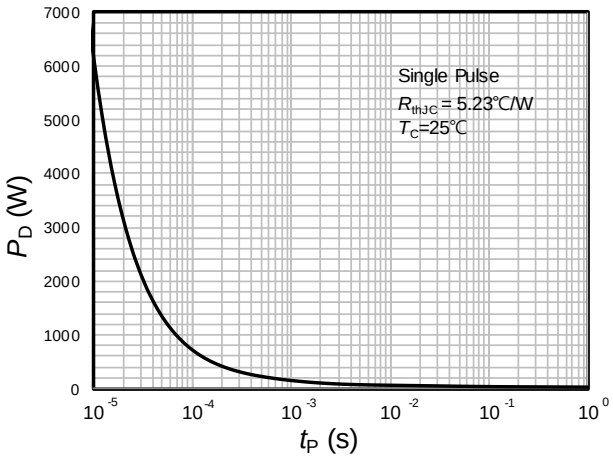

Fig.12 Output capacitance stored energy

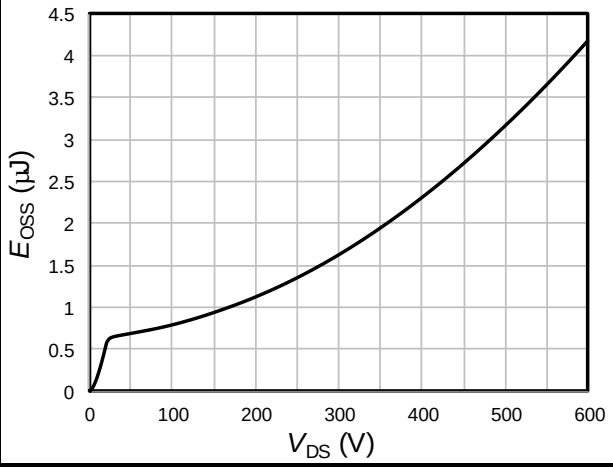

Fig.13 Transient thermal response

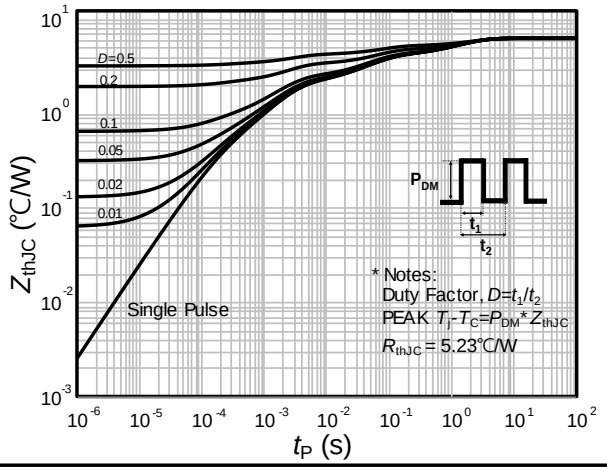

Fig.14 Safe operating area

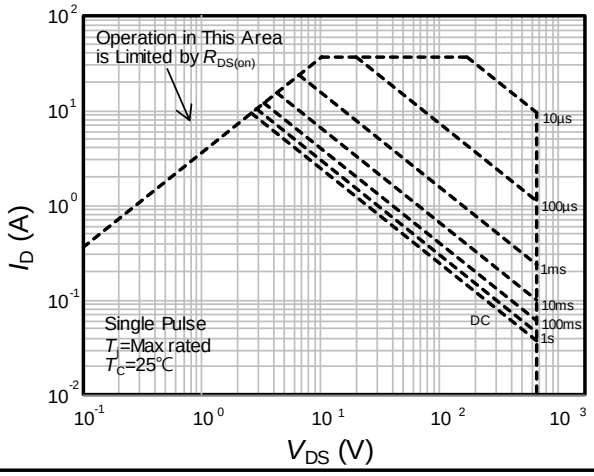

■ Test circuit

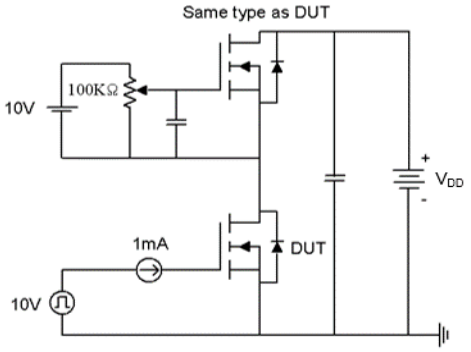

Fig15-1. Gate charge measurement circuit

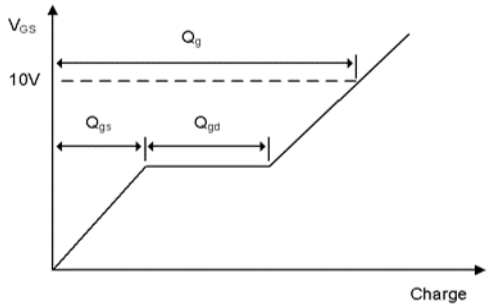

Fig15-2. Gate charge waveform

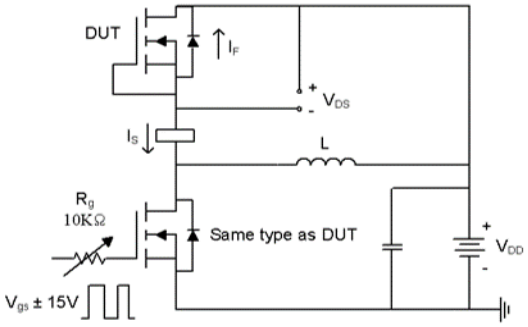

Fig16-1. Diode reverse recovery test circuit

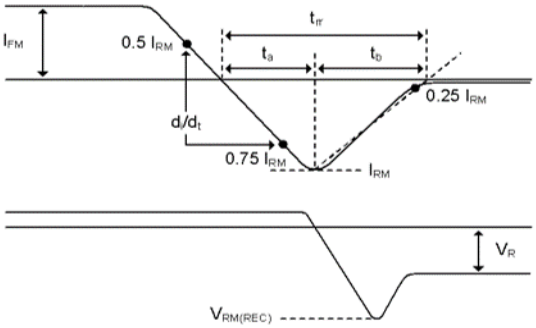

Fig16-2. Diode reverse recovery test waveform

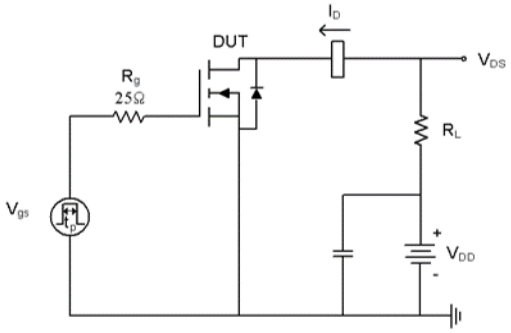

Fig17-1. Switching time test circuit for resistive load

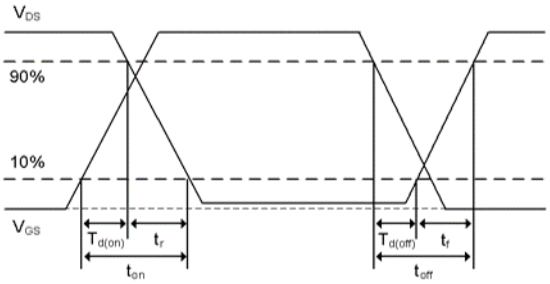

Fig17-2. Switching time waveform

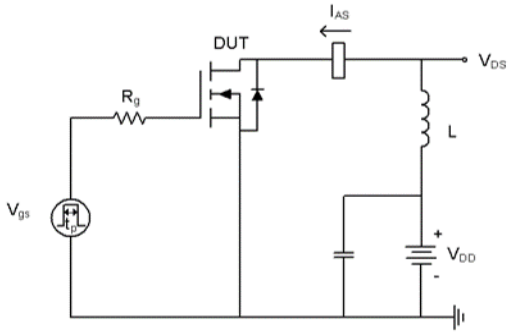

Fig18-1. Unclamped inductive load test circuit

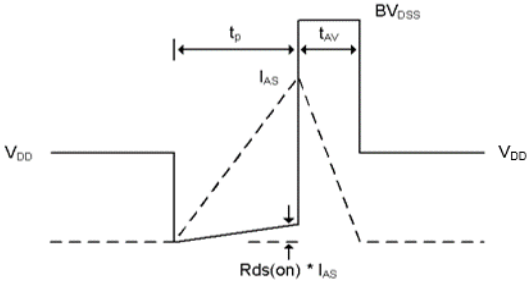

Fig18-2. Unclamped inductive waveform

■ Physical dimension

TO-220SFA (3L)

.

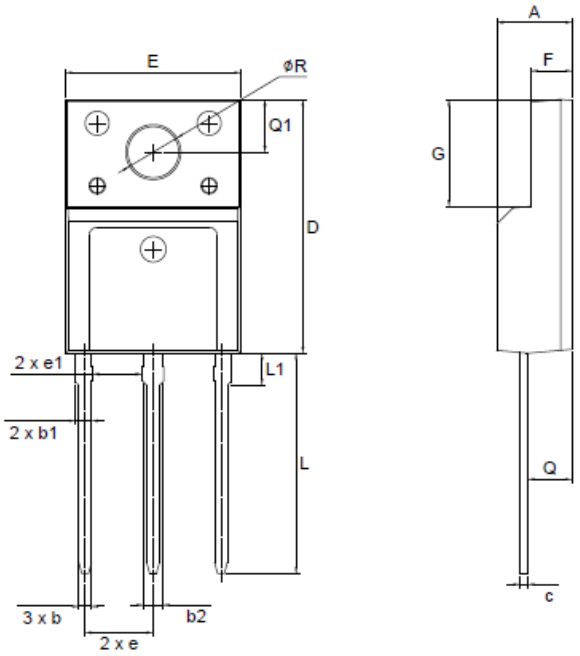

Note : Package body size, length and width do not include mold flash, protrusions and gate burrs.

Symbol	Dimension [mm]		
	Min	Nom	Max
A	4.5	-	4.9
b	0.7	-	0.9
b1	0.9	-	1.3
b2	1.0	-	1.4
c	0.45	-	0.60
D	15.67	-	16.07
E	10.8		11.2
e	4.25 BSC		
e1	3.0	-	-
F	2.34	-	2.74
G	6.48	-	6.88
L	13.58	-	13.98
L1	1.8	-	2.20
Q	2.65	-	-
Q1	3.20	-	3.40
ΦR	3.08	-	3.28
θ	3° Ref		

DISCLAIMER:

The Products are not designed for use in hostile environments, including, without limitation, aircraft, nuclear power generation, medical appliances, and devices or systems in which malfunction of any Product can reasonably be expected to result in a personal injury. Seller's customers using or selling Seller's products for use in such applications do so at their own risk and agree to fully defend and indemnify Seller.

Magnachip reserves the right to change the specifications and circuitry without notice at any time. Magnachip does not consider responsibility for use of any circuitry other than circuitry entirely included in a Magnachip product. Magnachip is a registered trademark of Magnachip Semiconductor Ltd.