MAP9004E/D

High Voltage AC LED Driver

General Description

The MAP9004E/D is LED Driver which has high input voltage ranged from 90V to 270V.

It can drive several series LEDs from rectified AC voltage.

The MAP9004E/D has higher LED current drive capability up to 240mA and the current can be adjustable with external resistors.

The MAP9004E/D is available in eSOP-8 and DFN-33 4LD with Halogen-free (fully RoHS compliant).

For more information, please contact local Magnachip sales office in world-wide or visit Magnachip's website

RoHS Compliant
HALOGEN-FREE

Features

- Wide operating voltage range
- Higher current drive capability
- Multiple connection for better efficiency, PF & THD
- EMI improvement
- OTP protection
- eSOP-8/DFN-33 4LD package

Applications

- AC LED Driver
- Lighting equipment
- LED Driver Power Supplies

Ordering Information

Part Number	Top Marking	Ambient Temperature Range	Package	RoHS Status
MAP9004ESRH	MAP9004E	-30℃ to +85℃	eSOP-8	Halogen Free
MAP9004DFRH	MAP9004D	-30℃ to +85℃	DFN-33 4LD	Halogen Free

Simplified Application Circuit

- Single Stage

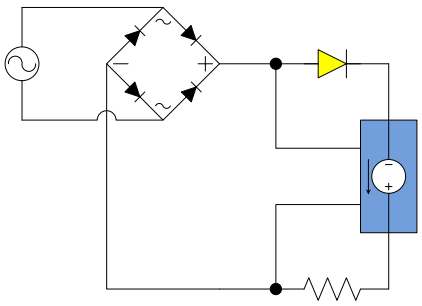

- Multi Stages for Better Efficiency, PF & THD

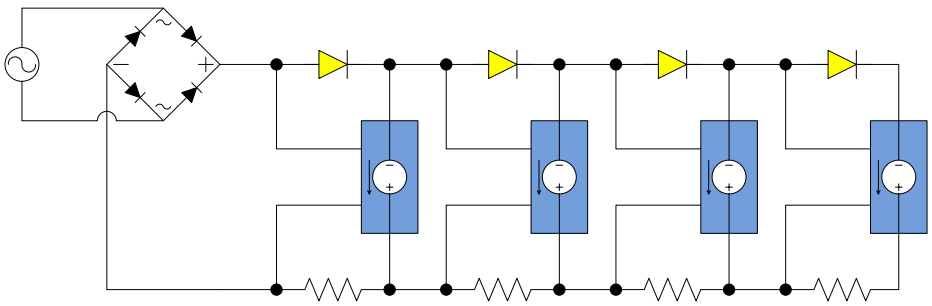

Pin Configuration & Description

- Pin Configuration

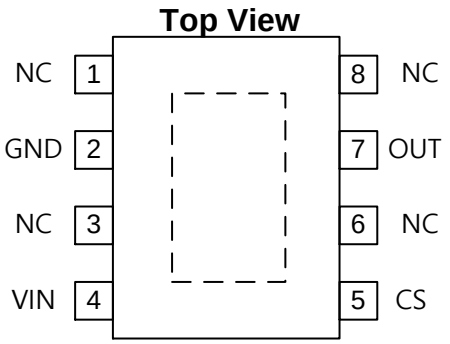

eSOP-8

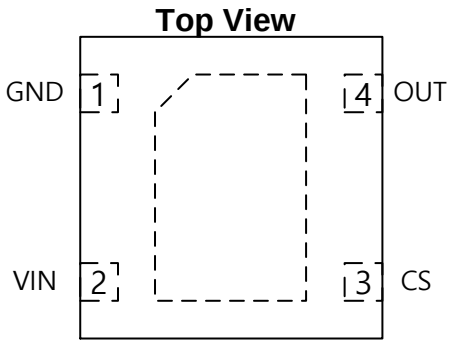

PDFN-33 4LD

- Pin Description

Pin (PDFN-33)		Descriptions
2 (1)	GND	Ground
4 (2)	VIN	Voltage input
5 (3)	CS	Current sensing
7 (4)	OUT	Output

Functional Block Diagram

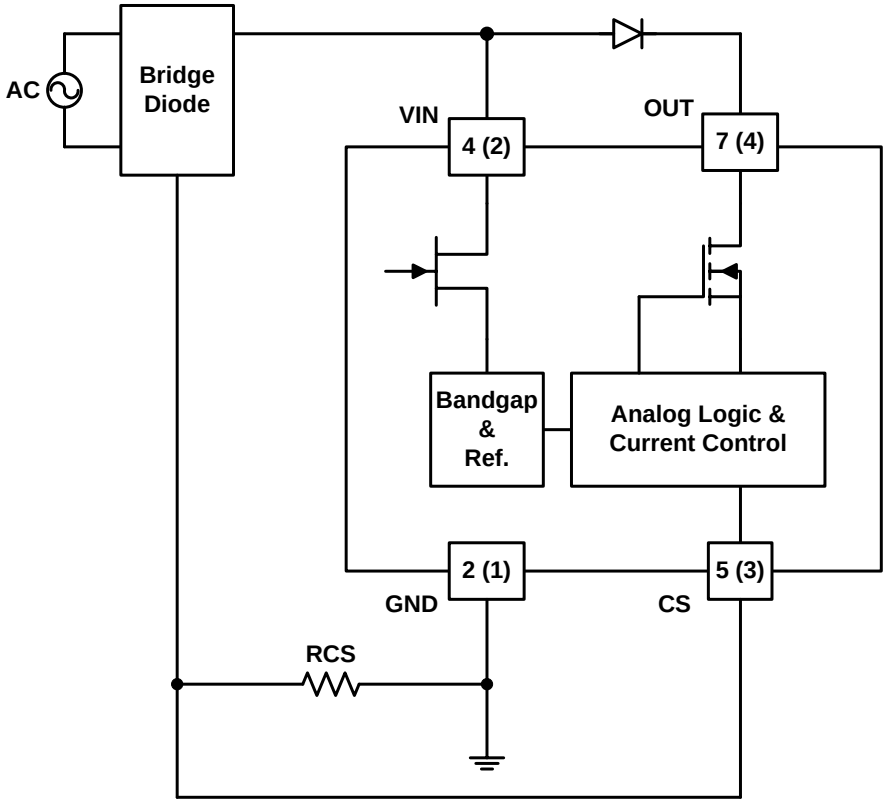

Absolute Maximum Ratings

PARAMETER		VALUE	UNIT
VIN		500	V
OUT		-0.3 ~ 500	V
CS		-6V ~ 0.3	V
Operating Temperature Range		-40 ~ 125	℃
Junction Temperature Range		-40 ~ 150	℃
Storage Temperature Range		-65 ~ 150	℃
Lead temperature(soldering, 10sec)		260	℃
ESD Susceptibility	HBM (Note 1)	4000	V
	MM (Note 2)	400	V
	CDM (Note 3)	2000	V

Note 1: ESD tested per JESD22A-114.
Note 2: ESD tested per JESD22A-115.
Note 3: ESD tested per JESD22C-101E

Thermal Resistance

PARAMETER		VALUE	UNIT
Thermal Resistance (θ_{JA}) , (Note4)	eSOP-8	71.2	℃/W
	DFN-33 4LD	65.9	
Thermal Resistance (θ_{JT}) , (Note5)	eSOP-8	26.1	
	DFN-33 4LD	23.1	

Note 4: Multi-layer PCB based on JEDEC standard (JESD51-7, 4Layer PCB)
Note 5: The metal PCB's diameter is 43mm and height is 1.6t

Electrical Characteristics

Ta = 25℃, CS Resistance = 6.8Ω unless otherwise specified

SYMBOL	PARAMETER	TEST CONDITION	MIN	TYP	MAX	UNIT
Supply						
V_{VIN_MIN}	Minimum Startup Voltage				25	V
I_{VIN}	Input current	V_{VIN} = 200V, V_{GND} = 0V	150	350	700	uA
Driver Section						
$I_{D\ Leak}$	Driver leakage current	V_{VIN} = 0V, V_{GND} = 0V, OUT = 400V	-	-	10	uA
I_{OUT}	Driver current	V_{VIN} =200V, OUT = 40V	180	185	190	mA
OTP Section						
OTP	Over temperature protection		150	-	-	℃

Note 6: Stress beyond the maximum ratings listed above may incur permanent damage to the device. Operating above the recommended conditions for extended time may stress the device and affect device reliability. Also the device may not operate normally above the recommended operating conditions. These are stress ratings only.

Typical Operating Characteristics (eSOP-8)

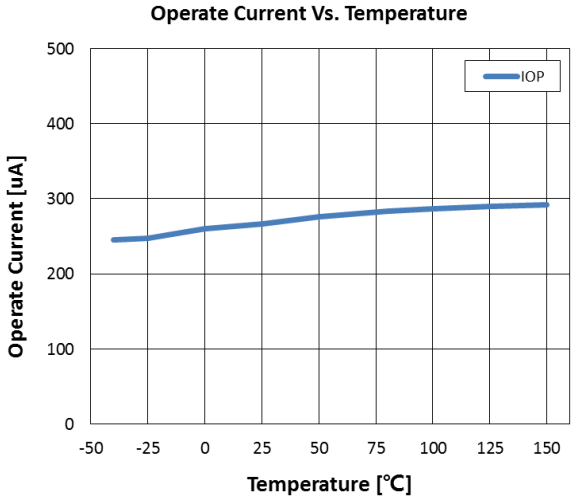

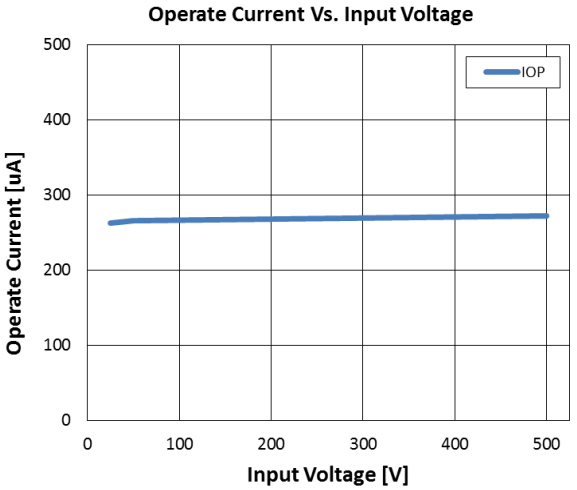

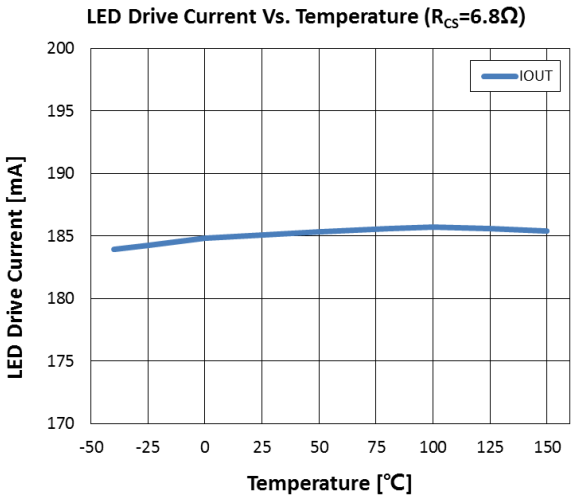

Typical Operating Characteristics (DFN33- 4LD)

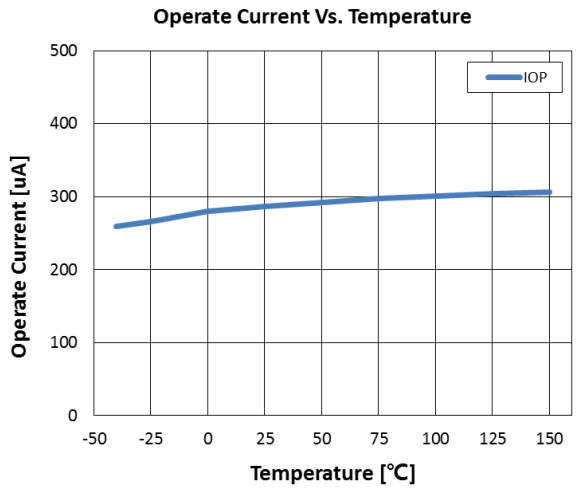

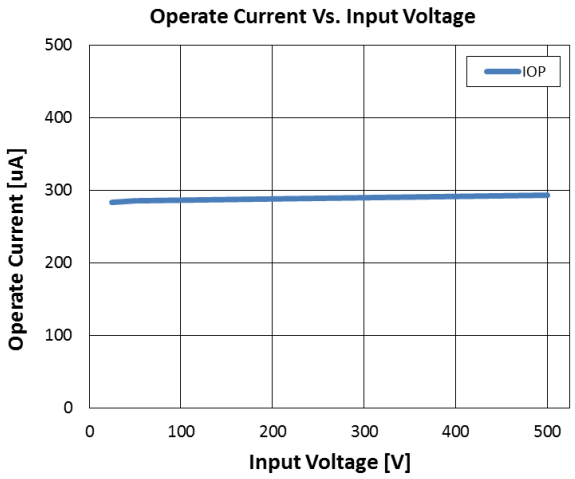

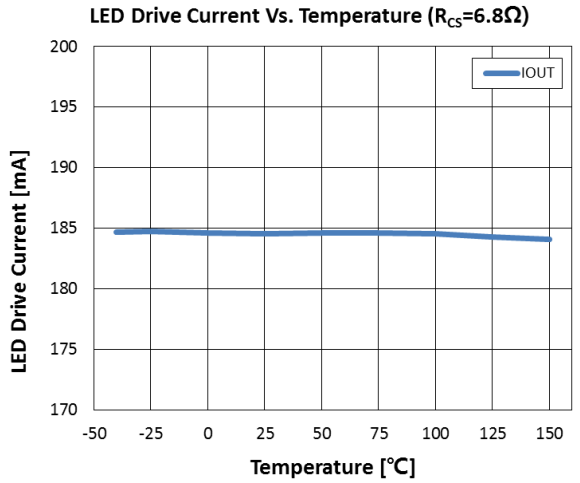

Physical Dimensions (eSOP-8)

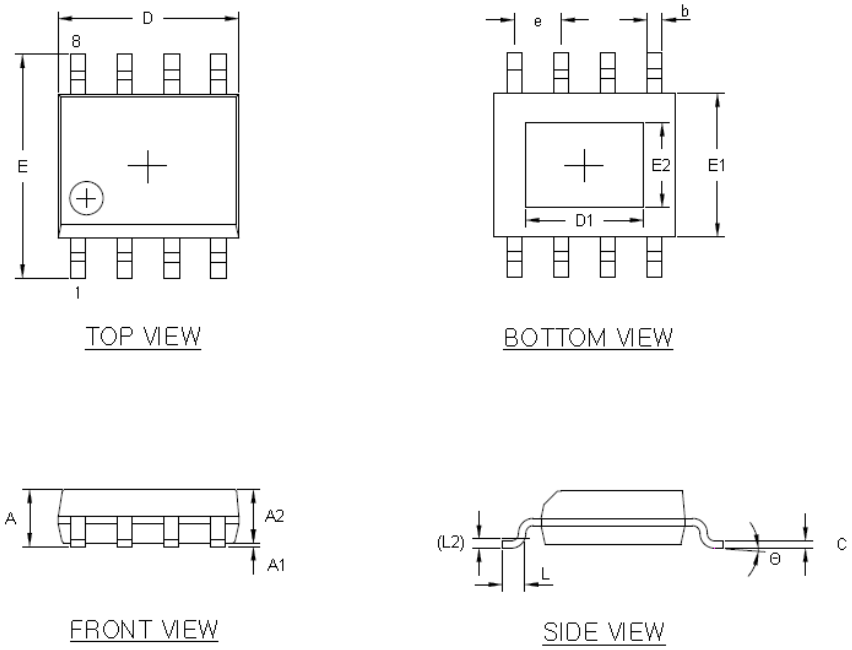

Symbol	Dimension [mm]	
	min	max
A	-	1.70
A1	0.00	0.15
A2	1.25	-
b	0.31	0.51
c	0.10	0.25
D	4.90 BSC	
D1	2.95	3.35
E	6.00 BSC	
E1	3.90 BSC	
E2	2.05	2.45
e	1.27 BSC	
Θ	0°	8°
L	0.40	1.27
L2	0.25(GAUGE PLANE)	

Physical Dimensions (DFNX3 - 4LD)

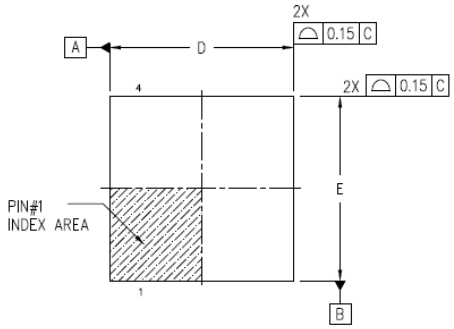

TOP VIEW

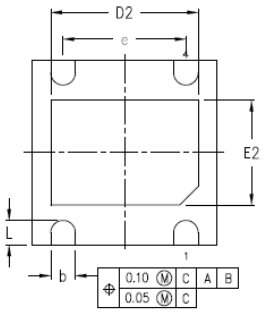

BOTTOM VIEW

Symbol	Dimsion (mm)		
	Min	Nom	Max
A	0.70	0.75	0.80
A1	0.00	0.02	0.05
A3	0.20 REF.		
D	2.85	3.00	3.15
E	2.85	3.00	3.15
D2	2.30	2.40	2.50
E2	1.60	1.70	1.80
b	0.30	0.40	0.45
e	2.00 BSC		
L	0.30	0.40	0.50

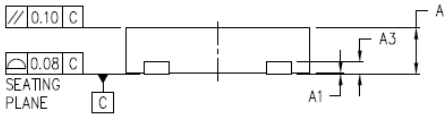

SIDE VIEW